Sikorsky Aircraft Corporation
6900 Main Street P.O. Box 9729
Stratford, Connecticut 06615-9129
(203) 386-4000

S-70™/H-60 HELICOPTER

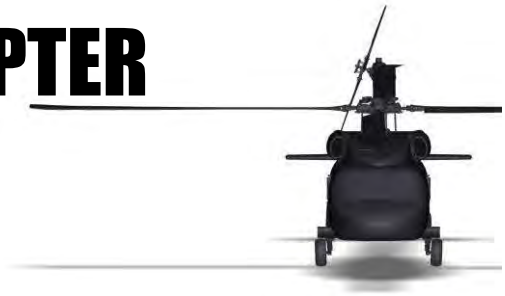

ALERT SERVICE BULLETIN

NOTICE TO ALL PERSONS RECEIVING THIS DOCUMENT:

WARNING: THIS DOCUMENT, OR AN EMBODIMENT OF IT IN ANY MEDIA, DISCLOSES INFORMATION WHICH IS PROPRIETARY, IS THE PROPERTY OF LOCKHEED MARTIN CORPORATION AND/OR ITS SUBSIDIARIES, IS AN UNPUBLISHED WORK PROTECTED UNDER APPLICABLE COPYRIGHT LAWS, AND IS DELIVERED ON THE EXPRESS CONDITION THAT IT IS NOT TO BE USED, DISCLOSED, REPRODUCED, IN WHOLE OR IN PART (INCLUDING REPRODUCTION AS A DERIVATIVE WORK), OR USED FOR MANUFACTURE FOR ANYONE OTHER THAN LOCKHEED MARTIN CORPORATION AND/OR ITS SUBSIDIARIES WITHOUT ITS WRITTEN CONSENT, AND THAT NO RIGHT IS GRANTED TO DISCLOSE OR SO USE ANY INFORMATION CONTAINED HEREIN. ALL RIGHTS RESERVED. ANY ACT IN VIOLATION OF APPLICABLE LAW MAY RESULT IN CIVIL AND CRIMINAL PENALTIES.

S-70™ IS A REGISTERED TRADEMARK OF SIKORSKY AIRCRAFT CORPORATION.

ASB 70-04-17

Basic Issue ▪ February 28/24

SUBJECT: POWERPLANT SYSTEMS – Engine Systems – One-Time Inspection of Power Turbine Shaft/Torque Reference Tube Magnetic Insert Braze.

Section 1. PLANNING INFORMATION

A. Effectivity — All new, overhauled or repaired T700 Turboshaft Engine power turbine assemblies identified in General Electric (GE) Alert Service Bulletin (ASB) T700 S/B 72-A0088, Dated February 28, 2024, shipped between January 1, 2020, and October 31, 2023 with less than 100 operating hours Time Since New (TSN) or less than 100 operating hours Time Since Overhaul (TSO) / Time Since Repair (TSR).

B. Purpose — To ensure the awareness of and compliance with the inspection outlined in General Electric (GE) Alert Service Bulletin (ASB) T700 S/B 72-A0088, Dated February 28, 2024.

C. Background — GE has notified Sikorsky of multiple failures of the braze joint on the torque reference shaft. GE identified that the failure is due to poor braze coverage on the AFT insert used to measure Torque (Q) and Power Turbine (Np) speed. GE has notified Sikorsky that several of the failures have occurred in the test cells, and one occurred in a fielded engine. Failure of the torque reference shaft AFT insert results in inaccurate and/or erratic Q and Np governing and display. As a result of notification Sikorsky released All Operators Letter CCS-70-AOL-24-0001 on January 22, 2024 further detailing the quality escape.

D. Description — Review and comply with GE ASB T700 S/B 72-A0088, Dated February 28, 2024.

WARNING – This document contains export-controlled information subject to the ITAR. USML XIX(g)

Section 1. PLANNING INFORMATION (CONTINUED)

E. Compliance Compliance is essential. The inspection outlined herein shall be performed prior to next flight and no later than March 29, 2024. For deployed aircraft, non-passenger ferry flights are permitted to move the aircraft to a maintenance facility. Spare engines shall be inspected prior to installation and no later than March 29, 2024.

F. Approval Inspection item.

G. Manpower (Estimated)

Not Applicable.

H. Tooling

None.

I. Weight and Balance

Not affected.

J. Electrical Load Data

Not affected.

K. Software Load Data

Not changed.

L. References

(1) Applicable S-70/H-60 model helicopter maintenance manual.

(2) GE ASB T700 S/B 72-A0088.

M. Publications Affected

None.

N. Attachment

(1) GE ASB T700 S/B 72-A0088.

This document contains export-controlled information. See WARNING on first page.

Section 2. MATERIAL INFORMATION

A. Basis for Material Data

Per helicopter.

B. Bill of Material

None.

C. Consumable Material

None.

Section 3. ACCOMPLISHMENT INSTRUCTIONS

A. Prepare helicopter for modification:

WARNING TO PREVENT ELECTRICAL SHOCK OF PERSONNEL OR POSSIBLE DAMAGE TO HELICOPTER COMPONENTS, MAKE SURE TO TURN OFF ALL ELECTRICAL POWER.

(1) Turn off all helicopter electrical and hydraulic power.

(2) Engage rotor brake or gust lock.

B. Remove engine in accordance with applicable S-70/H-60 model helicopter maintenance manual.

C. Perform inspection in accordance with GE ASB T700 S/B 72-A0088. For questions about scheduling your inspection, please contact your GE FSR or contact Sikorsky Customer Service Engineer at 1-800-Winged-S (1-800-946-4337) or by email at wcs_govt_field_serv_eng.gr-sik@lmco.com for assistance in scheduling your inspection.

D. Install engine in accordance with applicable S-70/H-60 model helicopter maintenance manual.

CAUTION MAKE SURE ALL FOREIGN OBJECT DEBRIS (FOD) IS REMOVED BEFORE RETURNING HELICOPTER TO SERVICE.

E. Inspect and clean as required to remove any FOD from aircraft and surrounding areas.

F. Return helicopter to service.

This document contains export-controlled information. See WARNING on first page.

Section 3. ACCOMPLISHMENT INSTRUCTIONS (CONTINUED)

G. Record of compliance:

(1) Make helicopter logbook entries to show compliance with this ASB as follows:

(a) Make helicopter level logbook entry on form SA7343-15 (Aircraft ASB and CSN Release Signoff).

(b) When ASB modifies a component that can be removed from this helicopter:

1. Make component log card entries on forms SA7343-22 (Aircraft Component Log Cards) & SA7343-21 (Component Log Cards), as applicable.

2. If a component modified by this ASB does not have a log card and the ASB does not create one, then annotate compliance on the next higher assembly that the component belongs to which does have a log card.

NOTE: If access to www.Sikorsky360.com is unavailable, complete attached ALERT SERVICE BULLETIN COMPLIANCE RECORD CARD and return it to Sikorsky Aircraft Corporation.

(2) Make an appropriate electronic compliance entry in the E-Notification section at www.Sikorsky360.com. Refer to User Guide located on the www.Sikorsky360.com/E-Notification Search page.

This document contains export-controlled information. See WARNING on first page.

(Fold over and tape closed)

SIKORSKY AIRCRAFT CORPORATION

FACSIMILE NUMBER (817) 762-6715

EMAIL ADDRESS: product_safety.gr-sik@lmco.com

ATTENTION: Gr-SIK, Product_Safety
SIKORSKY AIRCRAFT CORPORATION

IMPORTANT NOTICE

Upon COMPLIANCE with the attached ASB, Sikorsky requests your cooperation in completing and returning this ENTIRE PAGE by MAIL, FAX, or scan & EMAIL.

Please fill in the requested information at the bottom of the page, so we may maintain proper records documenting the configuration of your aircraft. This information is useful when determining configuration and effectivity of issues affecting fielded aircraft.

This request is in keeping with our policy to assure that our customers receive the latest information applicable for the maintenance of your aircraft. Thank you.

ALERT SERVICE BULLETIN: 70-04-17 **Compliance Record Card**

TITLE: POWERPLANT SYSTEMS – Engine Systems – One-Time Inspection of Power Turbine Shaft/Torque Reference Tube Magnetic Insert Braze.

OWNER/OPERATOR: _____

SUBMITTED BY: _____ **DATE:** _____

☐ **FOLLOWING SERIAL NUMBERS ARE <u>NOT</u> AFFECTED BY THIS ASB**

☐ **ASB <u>HAS BEEN COMPLIED</u> WITH ON HELICOPTER SERIAL NUMBERS:**

_____ _____ _____ _____ _____ _____

_____ _____ _____ _____ _____ _____

(Fold Up to Arrows)

This document contains export-controlled information. See WARNING on first page.

No Postage
Necessary

BUSINESS REPLY MAIL
FIRST-CLASS MAIL PERMIT NO. 432 BRIDGEPORT CT

POSTAGE WILL BE PAID BY ADDRESSEE

SIKORSKY AIRCRAFT CORPORATION

Commercial Systems and Services
Mailstop K100
124 QUARRY ROAD
TRUMBULL, CT 06611 U.S.A.
ATTENTION:
Gr-SIK, Product_Safety

Please complete the form on the reverse side and FAX to

FACSIMILE NUMBER (817) 762-6715

Or scan and email to:

EMAIL ADDRESS: product_safety.gr-sik@lmco.com

or fold and return ENTIRE form to Sikorsky Aircraft Corporation

This document contains export-controlled information. See WARNING on first page.

T700 TURBOSHAFT ENGINE

ALERT SERVICE BULLETIN

ENGINE - Power Turbine Module - Power Turbine Shaft/Torque Reference Tube Magnetic Insert Braze Inspection

GE PROPRIETARY INFORMATION

The information contained in this document is GE proprietary information and is disclosed in confidence. It is the property of GE and shall not be used, disclosed to others or reproduced without the express written consent of GE, including, but without limitation, it is not to be used in the creation, manufacture, development, or derivation of any repairs, modifications, spare parts, designs, or configuration changes or to obtain FAA or any other government or regulatory approval to do so. If consent is given for reproduction in whole or in part, this notice and the notice set forth on each page of this document shall appear in any such reproduction in whole or in part.

This technical data is considered ITAR controlled pursuant to 22 CFR Parts 120-130. Transfer of this data by any means to a Non-US Person, whether in the United States or abroad, without the proper U.S. Government authorization (e.g., License, exemption, NLR, etc.), is strictly prohibited.

Copyright (2024) General Electric Company, U.S.A.

DESTRUCTION NOTICE - Destroy by any method that will prevent disclosure of the contents or reconstruction of the document.

This document contains export-controlled information. See WARNING on first page.

ALERT SERVICE BULLETIN

ENGINE - Power Turbine Module - Power Turbine Shaft/Torque Reference Tube Magnetic Insert Braze Inspection

1. PLANNING INFORMATION

A. Effectivity

This Alert Service Bulletin is applicable to all T700 engines operating in commercial H60/S70 aircraft with power turbine (PT) drive shaft part number (P/N) 5125T92G01 installed with less than 100 total engine operating hours or 100 engine operating hours since replacement (TSR) of the PT drive shaft assembly produced or made between 2020 through October 2023.

Appendix A, Table 1 identifies engine serial numbers, known to GE, that were shipped from GE between 2020 - October 2023.

Appendix A, Table 2 identifies spare PT drive shaft assemblies, known to GE, that were shipped from GE between 2020 - October 2023.

There may be additional PT drive shaft assembly serial numbers that have less than 100 engine operating hours since repair installed into T700 engines that GE is not aware of and would require compliance with this Alert Service Bulletin. Operators should screen their engine logbooks to identify this population.

B. Description

This Alert Service Bulletin provides instructions to remove the engine C-sump cover and use an Ultrasonic Test (UT) Phase Array probe to inspect the PT drive shaft assembly reference tube magnetic insert end braze joint.

C. Compliance

Category 1

GE recommends that you do this Alert Service Bulletin before subsequent flight.

Non-passenger operation is allowed for repositioning the aircraft to a maintenance facility if required.

Impact A

This recommendation is to address a condition that may affect flight safety.

NOTE: This Alert Service Bulletin may be accomplished at the operator facility or in the overhaul shops.

GE PROPRIETARY INFORMATION - Subject to the restrictions on the cover or first page.

This document contains export-controlled information. See WARNING on first page.

D. Concurrent Requirements

None.

E. Reason

(1) Objective:

This Alert Service Bulletin provides an inspection to verify the minimum acceptable braze coverage on the PT drive shaft assembly reference tube magnetic insert.

(2) Condition:

Multiple PT drive shaft assemblies were shipped with inadequate braze coverage on the end of the PT shaft reference tube magnetic insert joint.

(3) Cause:

Inadequate braze coverage within the torque reference tube magnetic insert joint can become compromised leading to improper torque and speed indications.

(4) Improvement:

Planning has been updated and UT Phase Array probe inspection has been incorporated into the manufacturing process of the torque reference tube assembly.

(5) Substantiation:

Substantiation is provided by analysis and field experience.

F. Approval

Not applicable.

G. Manpower

You will need approximately one man-hour to do this Alert Service Bulletin once the area is exposed.

H. Weight and Balance

Weight and balance are not changed.

GE PROPRIETARY INFORMATION - Subject to the restrictions on the cover or first page.

This document contains export-controlled information. See WARNING on first page.

ALERT SERVICE BULLETIN

ENGINE - Power Turbine Module - Power Turbine Shaft/Torque Reference Tube Magnetic Insert Braze Inspection

I. References

FST-2572, Phase Array Ultrasonic Inspection Procedure
SEI-671, Aviation Unit and Intermediate Maintenance Manual for Engine, Aircraft Turboshaft Models: T700-GE-700, T700-GE-701, T700-GE-701A, T700-GE-701A-1, T700-GE-701C, T700-GE-701D
SEI-676, Depot Maintenance Manual for Engine, Aircraft, Turboshaft Models: T700-GE-700, T700-GE-701, T700-GE-701A, T700-GE-701A-1, T700-GE-401, T700-GE-401C, T700-GE-701C, T700-GE-701D
T700 Turboshaft Engine Service Record

J. Publications Affected

None.

K. Interchangeability

Not applicable.

L. Software Accomplishment Summary

Not applicable.

2. MATERIAL INFORMATION

A. Material - Requirements

(1) Parts necessary to do this Alert Service Bulletin:

Part Number	Qty/ Eng	Part Name	Unit ($) Price	Pkg Qty	Lead Time Days
4074T58P04 SEI-676, Figure 3-9, Item 5	(1)	Packing, Preformed	Quote	(-)	Quote
J1400P011 SEI-676, Figure 3-9, Item 5	(Alt)	Packing, Preformed	Quote	(-)	Quote
4074T58P09 SEI-676, Figure 3-9, Item 6	(1)	Packing, Preformed	Quote	(-)	Quote
J1400P159 SEI-676, Figure 3-9, Item 6	(Alt)	Packing, Preformed	Quote	(-)	Quote

GE PROPRIETARY INFORMATION - Subject to the restrictions on the cover or first page.

This document contains export-controlled information. See WARNING on first page.

(2) Other Spare Parts:

None.

(3) Consumables:

Engine Lubricating Oil (SEI-671, WP 0499 00, Item 88 or Item 90).

B. Industry Support Information

Not applicable.

C. Configuration Chart

Not applicable.

D. Parts Disposition

See paragraph 3., ACCOMPLISHMENT INSTRUCTIONS.

E. Tooling - Price and Availability

Part Number	Nomenclature
GE-FQAP-803	Ultrasonic Probe Test Kit (Provided by GE Aerospace)

GE PROPRIETARY INFORMATION - Subject to the restrictions on the cover or first page.

This document contains export-controlled information. See WARNING on first page.

ALERT SERVICE BULLETIN

ENGINE - Power Turbine Module - Power Turbine Shaft/Torque Reference Tube Magnetic Insert Braze Inspection

3. ACCOMPLISHMENT INSTRUCTIONS

A. General

NOTE: To accomplish this inspection there must be access to the engine C-sump heat shield to allow removal of the heat shield and the C-sump cover to insert the Phase Array Probe (approximately 12.5 inches). The inspection also requires electrical power for an ultrasonic instrument (approximately 12 inches x 12 inches x 6 inches) which must be visually observed by the inspector during the test and must be in close proximity to the probe. This may require removal of the engine from the aircraft in some installations. This inspection may also be carried out on an engine stand or in an engine storage container with the lid removed.

NOTE: Review the engine logbook for the installation time of the installed PT drive shaft assembly P/N 5125T92G01. If the current operational time on the part since installation is equal to or greater than 100 hours, compliance with this Alert Service Bulletin is satisfied. Go to paragraph 3.B.(3) and record compliance with this Alert Service Bulletin. If the PT drive shaft assembly is less than 100 hours, proceed with the remainder of this Alert Service Bulletin.

NOTE: This procedure gives instructions to remove the C-sump heat shield (2, Figure 1) and C-sump cover (5) to inspect the magnetic insert braze joint on the PT drive shaft assembly (16, Figure 2 and Figure 3).

(1) Remove the C-sump heat shield (2, Figure 1) and C-sump cover (5). Refer to SEI-671, WP 0383 00.

NOTE: The UT Phase Array Probe inspection must be performed by a level 2 or 3 NDT ultrasonic inspector who has been trained by GE Aerospace.

(2) Following the GE proprietary inspection procedure FST-2572 – Phase Array Ultrasonic Inspection Procedure for the torque reference tube, perform the braze inspection to quantify the percentage of braze.

(a) If percentage of braze is greater than or equal to 42%, the engine may be returned to service.

(b) If percentage of braze is less than 42%, tag the engine as failed PT shaft UT inspection and return the engine or PT module to a depot for repair or replacement of the PT drive shaft assembly.

(3) Once the inspection is completed, re-install the C-sump cover (5, Figure 1) and C-sump heat shield (2). Refer to SEI-671, WP 0383 00.

(4) For engines that have passed inspection, perform required checks. Refer to SEI-671, WP 0106 00, Table 1 or WP 0225 00, Table 1.

GE PROPRIETARY INFORMATION - Subject to the restrictions on the cover or first page.

This document contains export-controlled information. See WARNING on first page.

ALERT SERVICE BULLETIN

ENGINE - Power Turbine Module - Power Turbine Shaft/Torque Reference Tube Magnetic Insert Braze Inspection

B. Compliance

(1) Record information in Table A.

(2) Provide copies of Table A and the GE UT inspection report to the GE Field Service Representative and the Customer Representative.

(3) Record compliance of this Alert Service Bulletin in the appropriate T700 Turboshaft Engine Service Record.

GE PROPRIETARY INFORMATION - Subject to the restrictions on the cover or first page.

This document contains export-controlled information. See WARNING on first page.

ALERT SERVICE BULLETIN

ENGINE - Power Turbine Module - Power Turbine Shaft/Torque Reference Tube Magnetic Insert Braze Inspection

TABLE A - POWER TURBINE DRIVE SHAFT ASSEMBLY INSPECTION RESULTS

Engine or PT Module S/N (if applicable)	PT Drive Shaft Assembly P/N	PT Drive Shaft Assembly S/N	PT Shaft Time Since New (Hours)	PT Shaft Time Since Repair (Hours)	% Braze Coverage	Date
Work Performed by (Print Name):			Signature:			Date:

GE PROPRIETARY INFORMATION - Subject to the restrictions on the cover or first page.

This document contains export-controlled information. See WARNING on first page.

ALERT SERVICE BULLETIN

ENGINE - Power Turbine Module - Power Turbine Shaft/Torque Reference Tube Magnetic Insert Braze Inspection

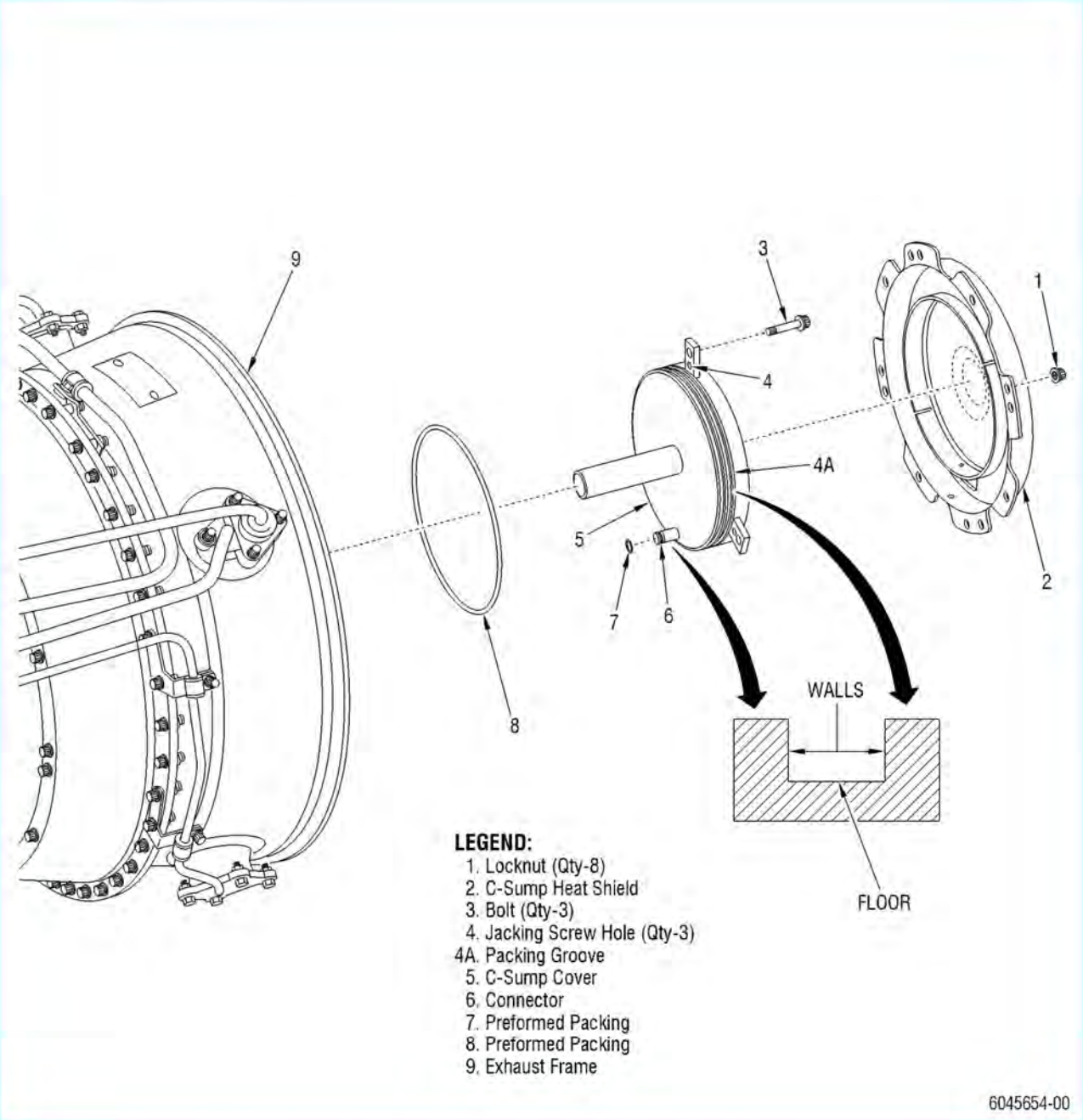

Figure 1. C-Sump Cover and C-Sump Heat Shield – Removal and Installation

GE PROPRIETARY INFORMATION - Subject to the restrictions on the cover or first page.

This document contains export-controlled information. See WARNING on first page.

ALERT SERVICE BULLETIN

ENGINE - Power Turbine Module - Power Turbine Shaft/Torque Reference Tube Magnetic Insert Braze Inspection

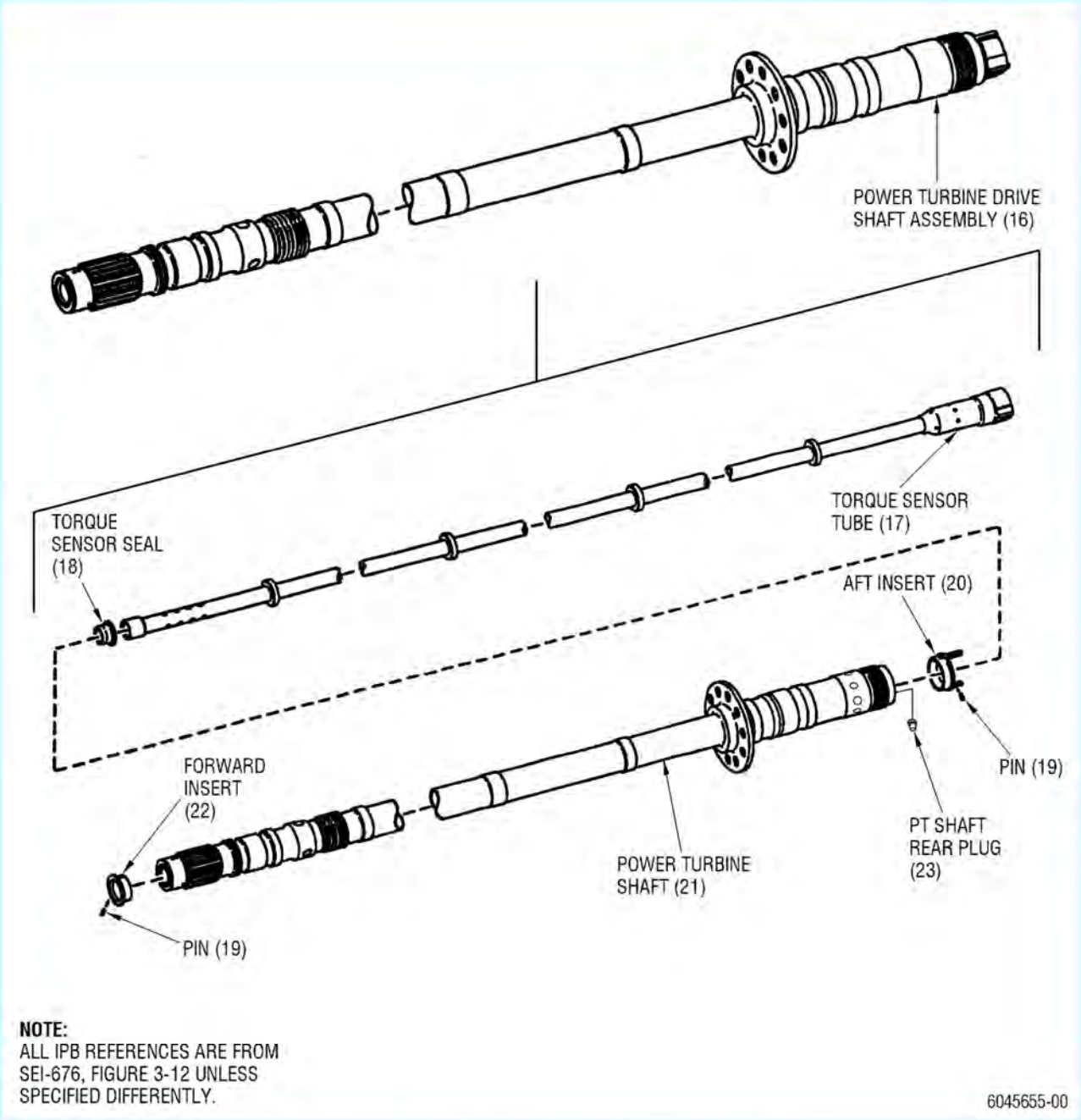

Figure 2. Power Turbine Drive Shaft Assembly

GE PROPRIETARY INFORMATION - Subject to the restrictions on the cover or first page.

This document contains export-controlled information. See WARNING on first page.

ALERT SERVICE BULLETIN

ENGINE - Power Turbine Module - Power Turbine Shaft/Torque Reference Tube Magnetic Insert Braze Inspection

Figure 3. C-Sump and Aft End of Power Turbine Shaft

GE PROPRIETARY INFORMATION - Subject to the restrictions on the cover or first page.

This document contains export-controlled information. See WARNING on first page.

ALERT SERVICE BULLETIN

ENGINE - Power Turbine Module - Power Turbine Shaft/Torque Reference Tube Magnetic Insert Braze Inspection

4. APPENDIX A

TABLE 1 – ENGINE SERIAL NUMBERS

(KNOWN TO GE THAT WERE SHIPPED FROM GE BETWEEN 2020 - OCTOBER 2023

Engine S/N	Engine S/N	Engine S/N
GE-E355694	GE-E355974	GE-E941307
GE-E355695	GE-E355976	GE-E941308
GE-E355698	GE-E355977	GE-E941309
GE-E355860	GE-E355978	GE-E941310
GE-E355867	GE-E355979	GE-E941346
GE-E355970		GE-E941347
GE-E355971		GE-E941348
GE-E355972		GE-E941349

TABLE 2 – SPARE POWER TURBINE DRIVE SHAFT ASSEMBLIES

(KNOWN TO GE THAT WERE SHIPPED FROM GE BETWEEN 2020 - OCTOBER 2023

Power Turbine Drive Shaft P/N	Power Turbine Drive Shaft S/N	Power Turbine Drive Shaft P/N	Power Turbine Drive Shaft S/N
5125T92G01	GATJC17K	5125T92G01	GATJAT3D
5125T92G01	GATJC1PL	5125T92G01	GATJATWJ
5125T92G01	GATJC1HM	5125T92G01	GATJC88W
5125T92G01	GATJC1HP	5125T92G01	GATJC89E
5125T92G01	GATJC1KN	5125T92G01	GATJC89K
5125T92G01	GATJC1MD	5125T92G01	GATJC8CH
5125T92G01	GATJC1NC	5125T92G01	GATJC8CK
5125T92G01	GATJC2A3		

GE PROPRIETARY INFORMATION - Subject to the restrictions on the cover or first page.

This document contains export-controlled information. See WARNING on first page.